EN Desk chair

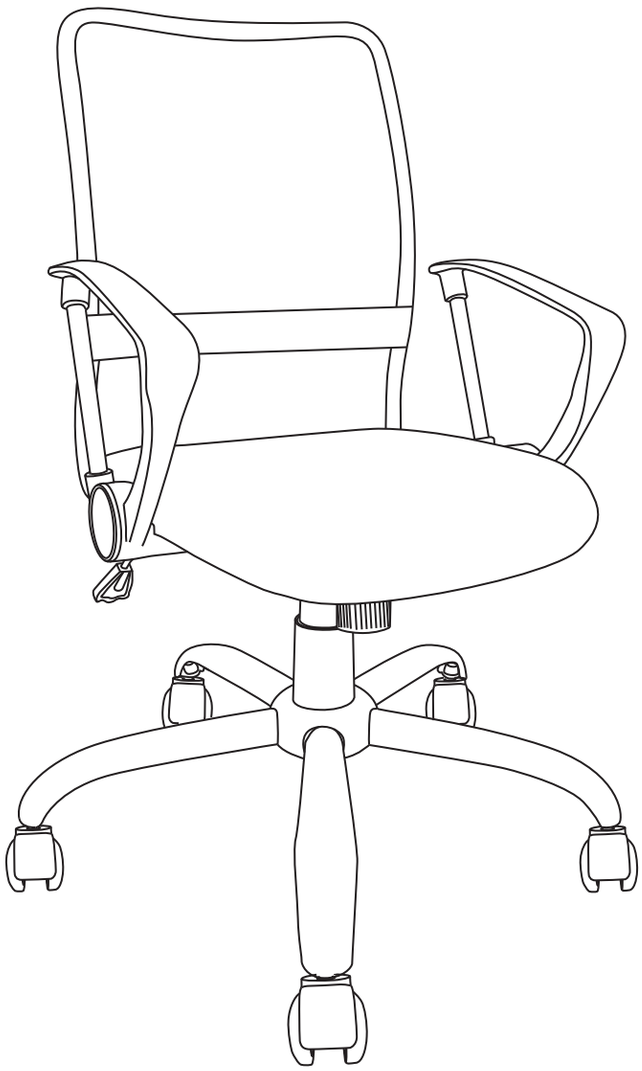

EN **IMPORTANT -** These instructions are for your safety. Please read through them thoroughly prior to handling the product and retain them for future reference.

V10724_5063022505927_MAND2_2324

5063022505927

EN Parts

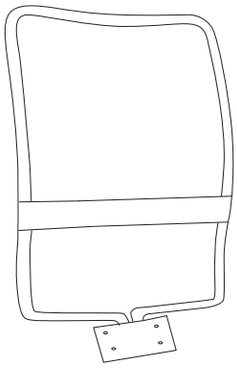

01. x1

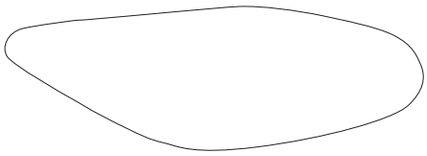

02. x1

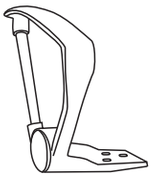

03. x1

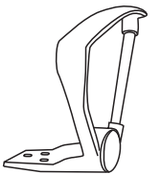

04. x1

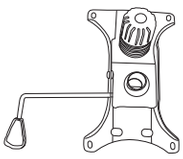

05. x1

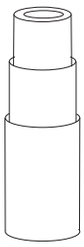

06. x1

07. x1

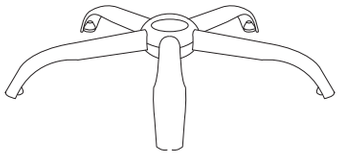

08. x1

09. x5

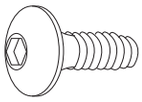

10. x4

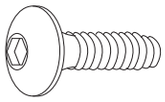

11. x10

12. x1

EN You will need

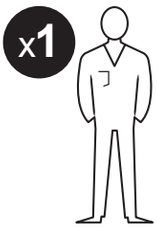

EN Contents

EN	
Safety	3
Guarantee	4
Assembly	5
Care & maintenance	8

5063022505927_MNL_IN_V01.indb 2 19/07/2024 11:51:46 am

EN
Before you start

- Important information. Self-assembly of the seat is likely required.
- Read the instructions carefully first and familiarise yourself with the sequence before you begin.
- Retain these instructions for future reference.
- Failure to follow these instructions may result in injury, damage to the product and your property.
- Take care opening packaging if using sharp implements to avoid damage to the product or personal injury.
- Make sure you have all parts listed - Check packaging as components may be concealed; do not dispose of packaging until you have located all parts.
- Assemble on a soft level surface to avoid damaging the unit or the floor.
- Make sure the area provides enough space to work.
- It is a good idea to carefully empty small fasteners and fittings into a bowl to avoid loss. This also makes size comparison and selection of similar parts easier.
- Be sure to follow the assembly steps as sequenced in this manual.
- Thoroughly check similar parts to make sure you are using the correct one on the required position. Some may have slight length or shape differences.
- To assist alignment in assembling parts it is often best to leave screw fastenings loose by a few turns and apply a final tighten to all on completion.

IMPORTANT! TO AVOID DAMAGE DO NOT OVERTIGHTEN SCREW FASTENINGS.

- The product must be assembled by a suitably competent person.
- If in any doubt as to how to assemble this product, consult a technically competent person.
- For domestic use only.

Safety

- Some parts could be hazardous to small children.
- Always use on a firm level surface ensuring that the legs or pedestal remain in even contact with the ground.
- Keep weight evenly distributed - DO NOT TILT or ROCK the seat.
- The seat is validated to accommodate occupant loads to 110 kg.
- For seats that feature fold flat operation follow the instruction manual guide. Keep hands clear of moving parts to avoid injury.
- For seats featuring lever operated, pressurised gas lifting, the lift device is ‘sealed for life’ and non-serviceable. DO NOT ATTEMPT to disassemble the pressure cylinder.
- Never stand on the seat or use any part as a step. This can cause damage and risks serious injury.
- Do not use if the seat is damaged or deformed.
- Check the security of fixings periodically. If you have any doubts about the seat’s safety, stop using it immediately.
- Self-assembly is likely required. Follow the assembly steps in this manual.
- For Indoor use only.
- If you are in any doubt as to how to assemble this product, consult a technically competent person.
- This seat must be assembled by a suitably competent person.

5063022505927_MNL_IN_V01.indb 3 19/07/2024 11:51:46 am

Guarantee

We take special care to select high quality materials and use manufacturing techniques that allow us to create products incorporating design and durability. This product has a manufacturer's guarantee of 0.5 year against manufacturing defects, from the date of purchase (if bought in store) or date of delivery (if bought online), at no additional cost for normal (non-professional or commercial) household use.

To make a claim under this guarantee, you must present your proof of purchase (such as a sales receipt, purchase invoice or other evidence admissible under applicable law), please keep your proof of purchase in a safe place. For this guarantee to apply, the product you purchased must be new, it will not apply to second hand or display products. Unless stated otherwise by applicable law, any replacement product issued under this guarantee will only be guaranteed until expiry of the original period guarantee period.

This guarantee covers product failures and malfunctions provided the product was used for the purpose for which it is intended and subject to installation, cleaning, care and maintenance in accordance with the information contained in these terms and conditions, in the user manual and standard practice, provided that standard practice does not conflict with the user manual.

This guarantee does not cover defects and damage caused by normal wear and tear or damage that could be the result of improper use, faulty installation or assembly, neglect, accident, misuse, or modification of the product. Unless stated otherwise by applicable law, this guarantee will not cover, in any case, ancillary costs (shipping, movement, costs of uninstalling and reinstalling, labour etc), or direct and indirect damage.

If the product is defective, we will, within a reasonable time, refund.

Rights under this guarantee are enforceable in the country in which you purchased this product. Guarantee related queries should be addressed to the store you purchased this product from.

The guarantee is in addition to and does not affect your statutory rights.

IMPORTANT - RETAIN THIS INFORMATION FOR FUTURE REFERENCE: READ CAREFULLY

5063022505927_MNL_IN_V01.indb 4 19/07/2024 11:51:46 am

EN Assembly

01

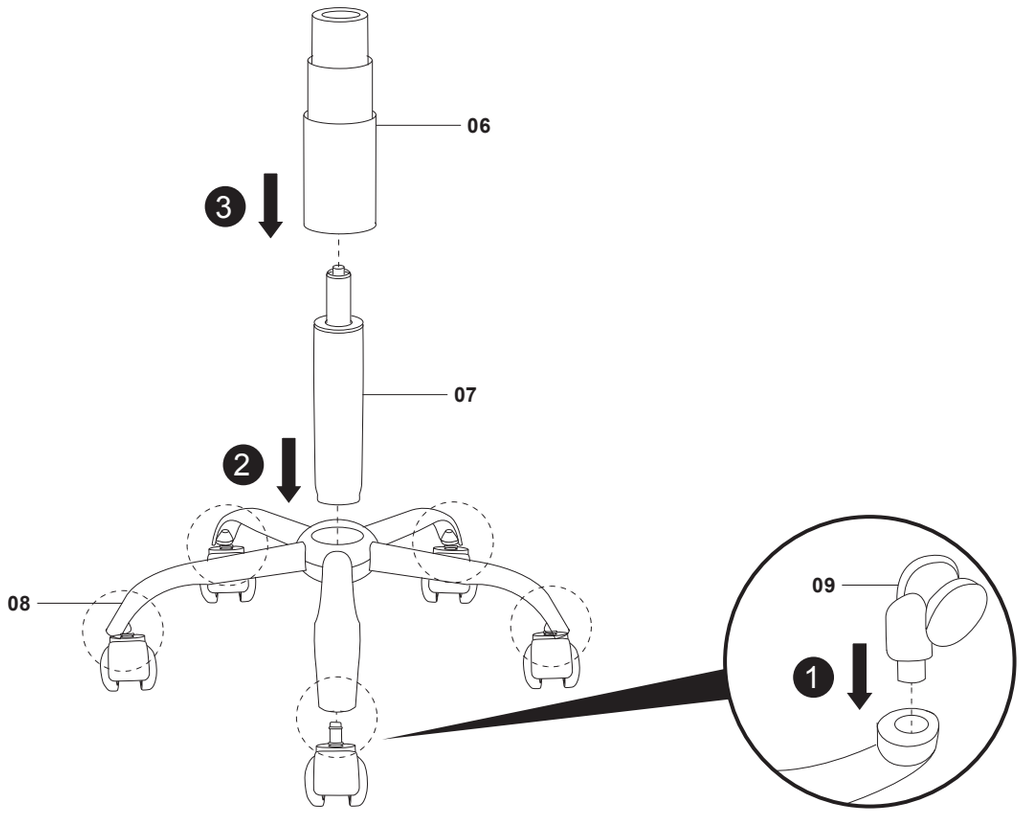

02

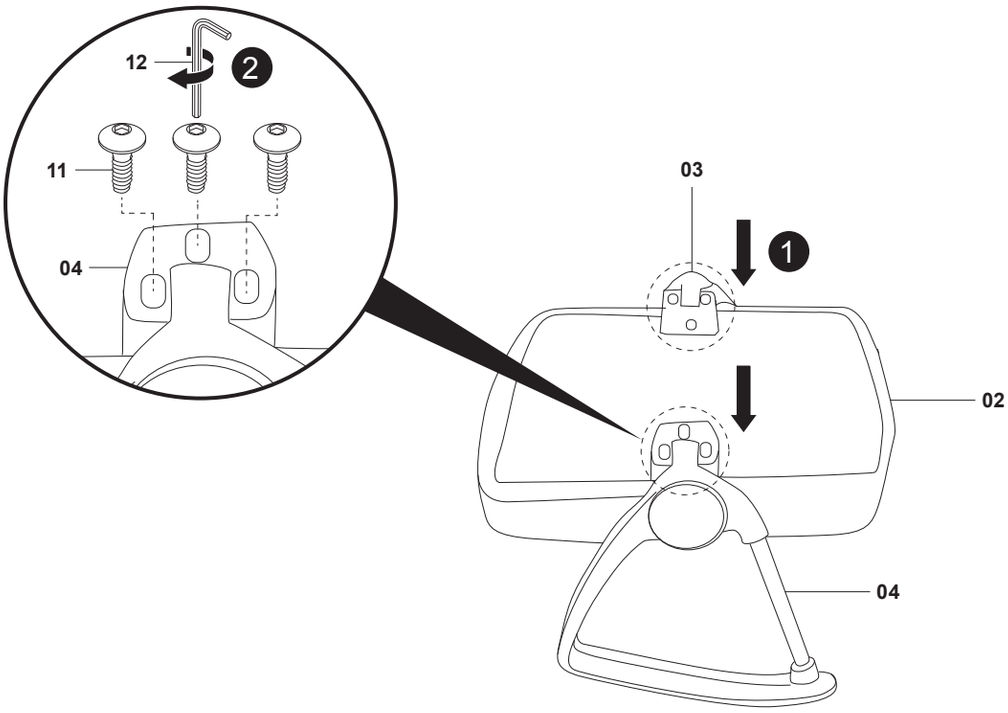

5063022505927_MNL_IN_V01.indb 5 19/07/2024 11:51:47 am

03

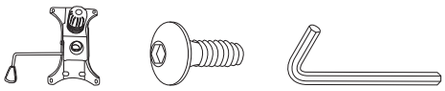

05. x1 10. x4 12. x1

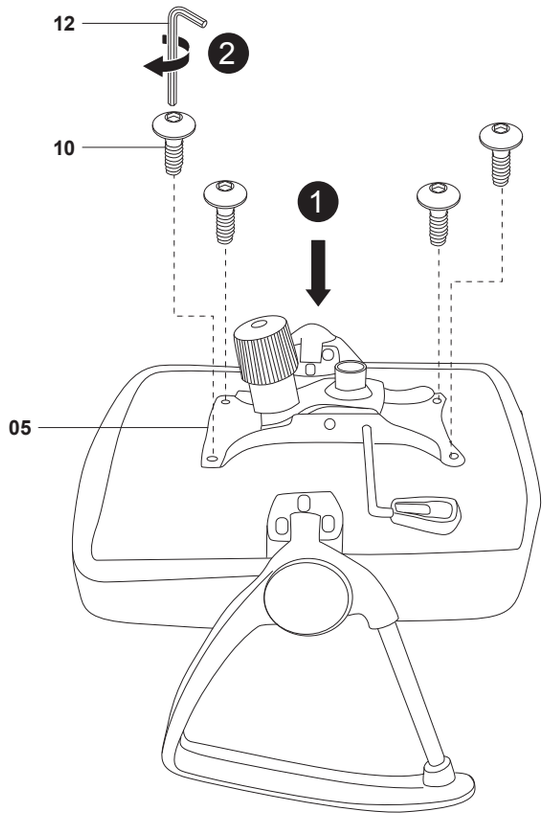

04

01. x1 11. x4 12. x1

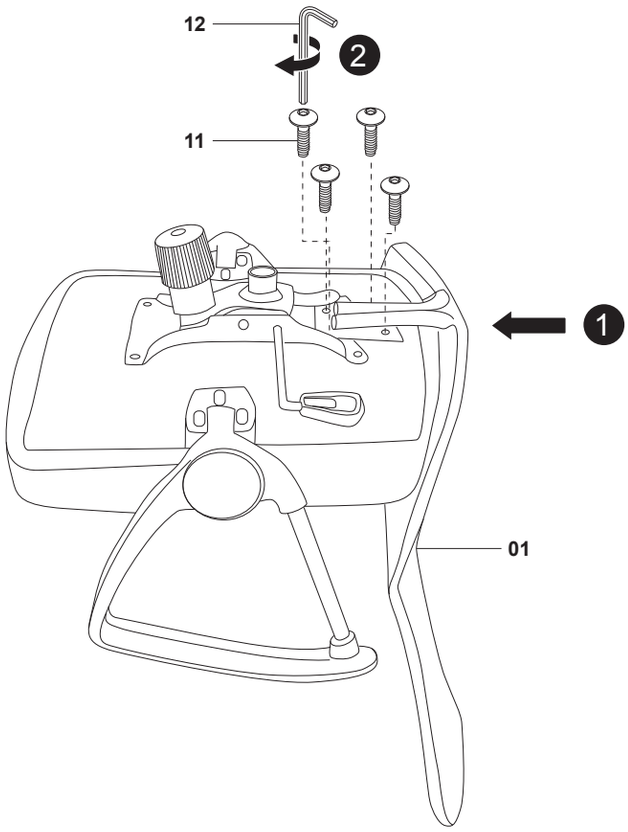

05

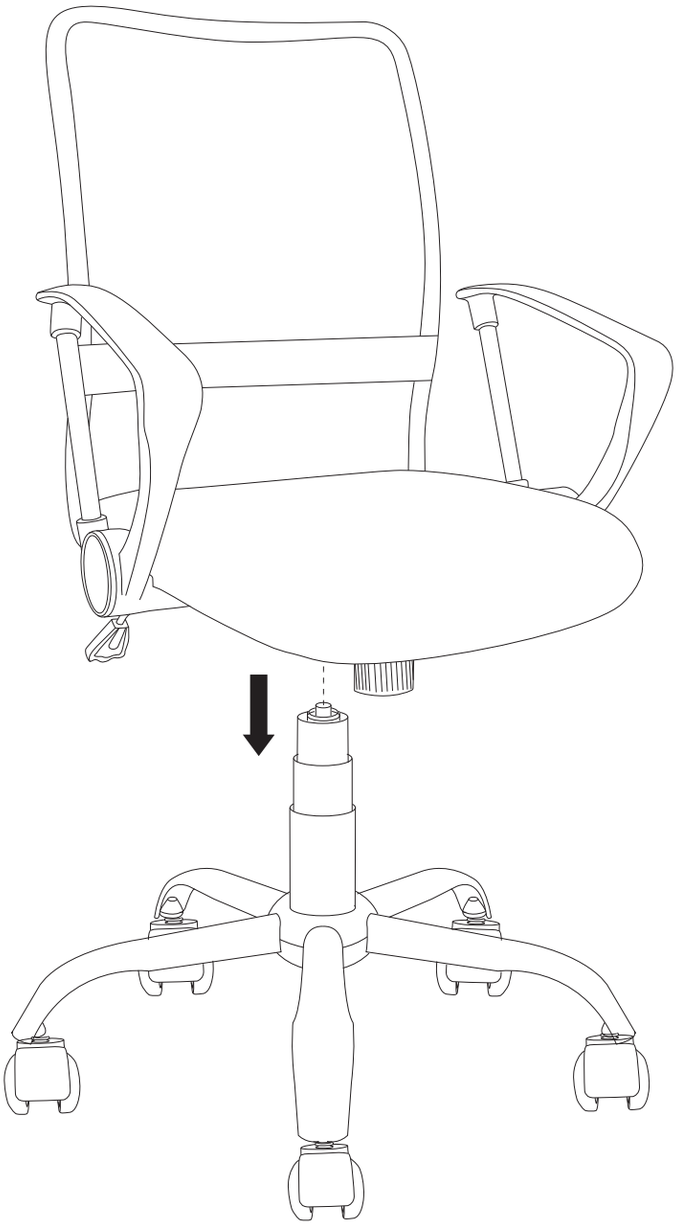

5063022505927_MNL_IN_V01.indb 7 19/07/2024 11:51:47 am

EN Care & maintenance

- Wipe clean with a damp cloth and a soft damp cloth to clean the surface of the product.
- Wipe dry with a clean cloth.
- Never use any solvents, scourers, abrasives, bleach, acids, strong detergents, aggressive chemical cleaners.

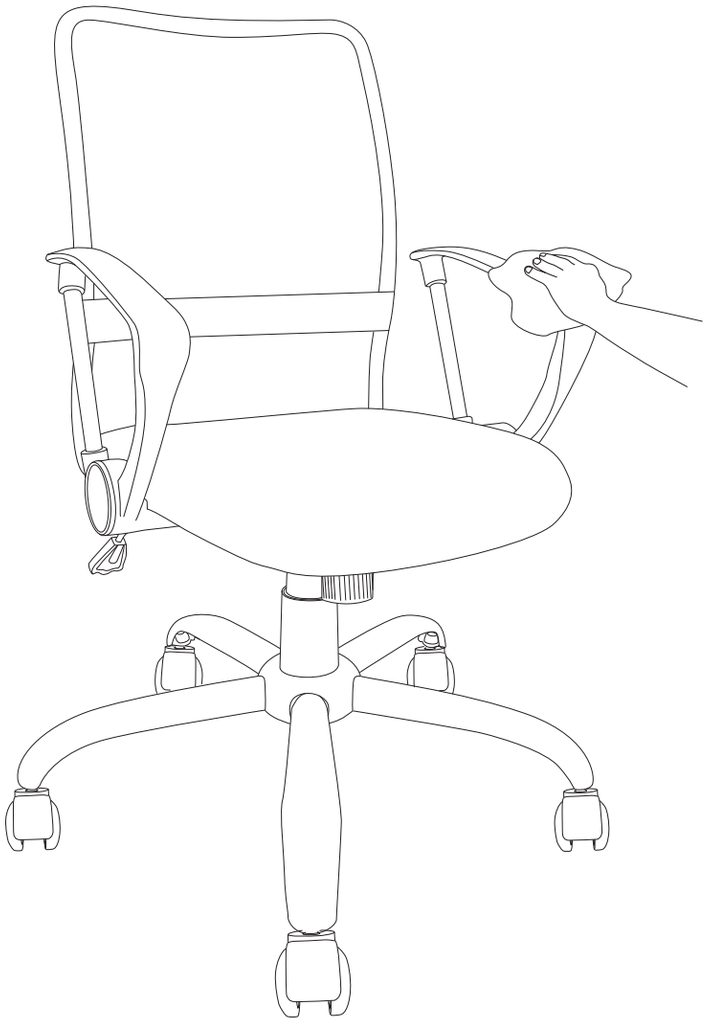

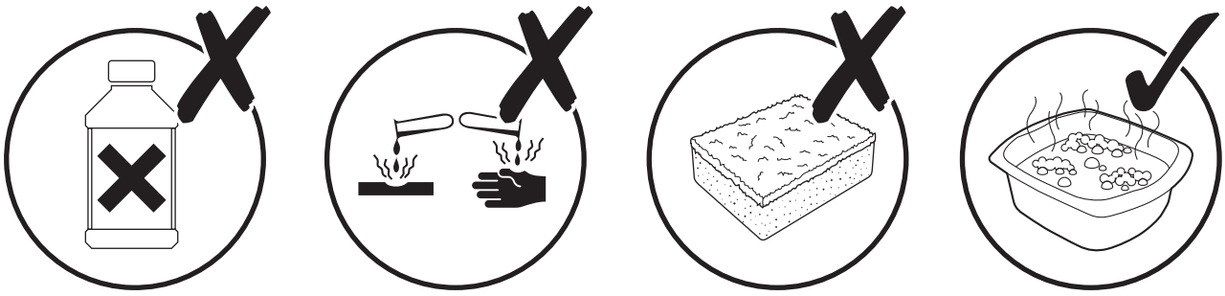

Manufacturer:

UK Manufacturer:
Kingfisher International Products Limited,
1 Paddington Square, London, W2 1GG,
United Kingdom

EU Manufacturer:
Kingfisher International Products B.V.,
Rapenburgerstraat 175E,
1011 VM Amsterdam,
The Netherlands

EN www.diy.com
www.screwfix.com
www.screwfix.ie
To view instruction manuals online, visit www.kingfisher.com/products

5063022505927_MNL_IN_V01.indb 8 19/07/2024 11:51:47 am