LAPUSBSKT2IL-B

Wiring Accessories

13A Socket with USB Charger

V10225_5059340961507_MAND2_2324

Safety Warning

For your safety, this product must be installed in accordance with local Building Regulations. **If in any doubt, or where required by the law, consult a competent person who is registered with an electrical self-certification scheme.** Further information is available online or from your Local Authority.
Please read carefully and use in accordance with these safety wiring instructions. Before commencing any electrical work ensure the supply is switched off at the mains. Either by switching off the consumer unit or by removing the appropriate fuse or turning off MCB (trip). Wiring should be in accordance with the latest edition of the IET regulations (BS 7671). To prevent fire hazard always use cable of the correct rating & type for the application.

Warning do not exceed the load rating of this device as stated on the rear of the product.

Wire Identification – Twin & Earth Cable

Note - As from 1st April 2004 new colour codes for hard wire installations were introduced.

EARTH = Green/Yellow Sleeving
NEUTRAL = Black (pre Apr 04) / Blue (after Apr 04)
LIVE = Red (pre Apr 04) / Brown (after Apr 04)



Wiring Instructions

1. Power Off

Before commencing work always isolate the power at the consumer unit / fuse box.
*Note – If your installation uses a four-lug metal mounting box, remove the top and bottom lugs or bend fully back.

2a. Replacing an existing accessory

1. Unscrew the accessory from the wall/mounting box.
2. Note the cable connections:
The illustration shows 1 wire of each colour connected to each terminal. There should be an additional connection between the mounting box earth terminal and the accessory earth terminal.
3. Unscrew each terminal to release the wire.

2b. New installation

1. Install mounting box (metal or moulded) for either flush or surface mounting, ensuring appropriate size of product (Mounting box to be purchased separately).
2. Select the most suitable entry point of the mounting box (knock-out) and route the cables through.
If a metal box is used, a cable grommet should be fitted to the entry point.
3. Cables should be prepared so a sufficient conductor length reaches the terminals.
Strip the ends of the individual conductors leaving an adequate length bare to enter terminals.

3. Connection (See diagram)

1. Line up the new accessory to mounting box and take note of where each terminal is located.
2. Connect each wire to the matching terminal.
An earth connection should always be made between the mounting box earth terminal and the accessory earth terminal, where fitted.
All bare earth wires must be sheathed with green/yellow sleeving.
When connecting the new accessory ensure that only the bare end of the wire enters the terminal and no bare wires are visible.
3. Tighten terminal screws securely. (Do not over tighten)

4. Complete Installation & Test

1. Carefully position the accessory into the mounting box, ensuring that no wires are trapped between the plate and the wall and secure with screws (do not over tighten) then insert screw covers (optional).
2. Once the installation has been completed correctly, replace the fuse/ reset MCB (trip), switch the power back on at the consumer unit and test.

5. Insulation Testing

This socket outlet is designed to withstand insulation resistance testing at 500V as defined by BS1363-2.

- Perform insulation test between Line & Neutral at 250V.
- 500V test may be performed between Line & Earth, Neutral & Earth.
  Or,
- Disconnect all Neutral connection in the socket and connect into terminal block before replacing the socket prior to test.

Double Switched Socket – 12W USB

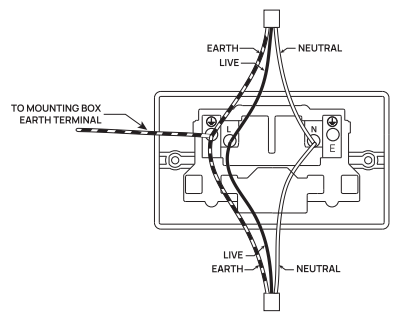

USB charge shared between outputs

Double Switched Socket – 22W & 45W

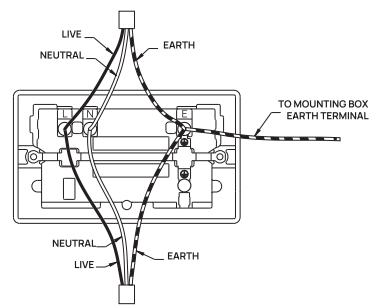

USB charge shared between outputs

Additional Advice for Decorative Products

Fixing method varies depending on which product range is supplied. Always ensure wall surface is reasonably flat and smooth, with no bumps or projections. Metal frontplates WITH screw fixing holes, fix the unit to the back box using two fixing screws supplied. All Decorative products MUST have an earth connection between the frontplate and back box. Frontplates WITHOUT screw fixing holes. These products comprise main unit with integral gasket, and frontplate as separate item. Fix unit to back box using two fixing screws supplied. Clip frontplate onto main assembly, ensuring screwdriver notch is located bottom right hand corner.
To remove plate, place medium size flat bladed screwdriver in notch and lever off against gasket.

USB Charger Information

The max power in Watts (W) of each USB outlet is shown on the surface of the product.
When two devices are connected the power output is shared, meaning devices may charge more slowly than with a normal single plug charging. 22W and 45W products offer variable voltage fast charge power output from a single USB outlet. Note, the fast charge is only available when one device is connected. When two devices are connected the output power is reduced to a fixed 5V output.
Please refer to the technical table for performance details.

Low energy stand-by mode

When not in use the USB sockets are in a low energy stand-by mode.
The USB circuits in this socket are designed to withstand insulation resistance tests at 500V. A reading of 10MΩ minimum is typically achieved by the USB socket.

Charging Performance

Several factors can have an impact on the USB charging performance. Please check the specification table for the output rates and charging protocols of the USB A and C ports, output is reduced when two devices are connected.
The charging performance is dictated by the device connected; a device will have a limit on the power it can receive.
The USB cable plays a significant role in charging speed. Lower quality cables may have higher resistance, limiting the amount of current that can pass through, slowing charging speeds. Higher quality or certified cables, especially for fast charging, can improve performance.
Care should be taken when inserting and removing cables from the USB ports to prevent damage.
Please check your device compatibility instructions to determine whether this product matches your equipment requirements.

Technical

Voltage : 220-240V ac
Frequency : 50/60Hz
Rating : 13A
Terminal capacity : 3 x 2.5mm² 3 x 4mm² 2 x 6.0mm²
Min box depth (profiled plates) : 25mm
Min box depth (flat plates) : 35mm or 25mm with spacer provided.
Note - The front surface of this product may become warm in use. This is normal and not cause for concern.

ASTA Approved

The ASTA quality mark is evidence that the product has been independently tested to comply with the relevant clauses of the applicable standards.

Intertek
Lic No.1182

Care

To maintain the high quality appearance of decorative finish switches and sockets, we recommend the use of a soft cloth periodically to clean the front face. When installing a decorative product please ensure that the wall is decorated, finished and free of moisture prior to installation. We recommends avoiding using, but not restricted to, these substances from becoming in contact with the decorative metal front-plates when cleaning or decorating:

- Adhesive tape, including low tack masking tape
- Solvents
- White spirit
- Multi surface cleaners
- Industrial multipurpose cleaning wipes
- Wet wipes

Using items like those listed above may cause a degrading effect to the front-plates lacquer/plated finish, although the function will remain unaffected.

Spec	12W AA	12W AC	22W AC	45W AC
Manufacturers model identifier	x22UAA12	x22UAC12	x22UAC22	x22UAC45
USB Output	Type A: 5V DC 2.4A 12.0W MAX Total: 5V DC 2.4A 12.0W MAX	Type C: 5V DC 2.4A 12.0W MAX Type A: 5V DC 2.4A 12.0W MAX Type C + Type A: 5V DC 2.4A 12.0W MAX	Type C: 5V DC 3.0A 15.0W MAX 9V DC 2.4A 21.6W MAX 12V DC 1.5A 18.0W MAX 15V DC 1.4A 21.0W MAX 20V DC 1.0A 20.0W MAX Type A: 5V DC 3.0A 15.0W MAX 9V DC 2.4A 21.6W MAX 12V DC 1.5A 18.0W MAX Type C + Type A: 5V DC 3.0A 15.0W MAX	Type C: 5V DC 3.0A 15.0W MAX 9V DC 3.0A 27.0W MAX 12V DC 3.0A 36.0W MAX 15V DC 3.0A 45.0W MAX 20V DC 2.25A 45.0W MAX Type A: 5V DC 3.0A 15.0W MAX 9V DC 3.0A 27.0W MAX 12V DC 2.5A 30.0W MAX Type C + Type A: 5V DC 5.4A 27.0W MAX
Input	230V~50Hz	230V~50Hz	230V~50Hz	230V~50Hz
Average active efficiency	Type A: 5V DC 2.4A: >79.94% Type A + Type A: 5V DC 2.4A: >74.74%	Type C: 5V DC 2.4A: >79.94% Type A: 5V DC 2.4A: >79.94% Type C + Type A: 5V DC 2.4A: >74.74%	Type C: 5V DC 3.0A: >81.39% 9V DC 2.4A: >85.79% 12V DC 1.5A: >85.00% 15V DC 1.4A: >85.68% 20V DC 1.0A: >85.47% Type A: 5V DC 3.0A: >81.39% 9V DC 2.4A: >85.79% 12V DC 1.5A: >85.00% Type C + Type A: 5V DC 3.0A: >76.41%	Type C: 5V DC 3.0A: >81.39% 9V DC 3.0A: >86.62% 12V DC 3.0A: >87.40% 15V DC 3.0A: >87.73% 20V DC 2.25A: >87.73% Type A: 5V DC 3.0A: >81.39% 9V DC 3.0A: >86.62% 12V DC 2.5A: >86.95% Type C + Type A: 5V DC 5.4A: >80.82%
Efficiency at low load (10%)	Type A: 5V DC 2.4A: >77.52% Type A + Type A: 5V DC 2.4A: >78.42%	Type C: 5V DC 2.4A: >77.71% Type A: 5V DC 2.4A: >77.52% Type C + Type A: 5V DC 2.4A: >78.70%	Type C: 5V DC 3.0A: >78.14% 9V DC 2.4A: >81.67% 12V DC 1.5A: >77.28% 15V DC 1.4A: >77.50% 20V DC 1.0A: >73.09% Type A: 5V DC 3.0A: >78.62% 9V DC 2.4A: >79.08% 12V DC 1.5A: >74.45% Type C + Type A: 5V DC 3.0A: >78.07%	Type C: 5V DC 3.0A: >77.48% 9V DC 3.0A: >82.17% 12V DC 3.0A: >82.96% 15V DC 3.0A: >83.73% 20V DC 2.25A: >81.25% Type A: 5V DC 3.0A: >85.51% 9V DC 3.0A: >84.48% 12V DC 2.5A: >84.65% Type C + Type A: 5V DC 5.4A: >82.81%
No load power consumption	1 Port <0.10W 2 Port <0.30W	1 Port <0.10W 2 Port <0.30W	1 Port <0.10W 2 Port <0.30W	1 Port <0.10W 2 Port <0.30W
Note	x = range, 3, 4, 8, 9, EBG, Ez, Cz, PCDy, PCy, Nz, Sz, Fz, Lz, Tz, MC5, PM * = insert colour, 'W', 'B' or 'G'; y = PCD/PC finish 'WH','CL','BS','PC','BC','PB', 'PW','AB','SB','MB','MG','BL','CH', 'SL', 'BN', 'GR', 'WD'; z = Metal finish 'BS', 'PC', 'BN', 'PR', 'PB', 'MB', 'FB', 'AB', 'BI', 'CR', 'PW', 'BC', 'BG','SL', 'SB'.			

Batch Code Explanation

yyWxx Manufacturing date code, year of manufacture (yy) and week of manufacture (Wxx)

Address/Helpline

Manufacturer • Fabricant • Producent • Producător • Fabricante:
UK Manufacturer: Kingfisher International Products Limited,
1 Paddington Square, London, W2 1GG, United Kingdom
www.kingfisher.com/products • www.diy.com • www.screwfix.com

EU Manufacturer: Kingfisher International Products B.V.,
Rapenburgerstraat 175E, 1011 VM Amsterdam,
The Netherlands • www.castorama.fr • www.bricodepot.fr • www.screwfix.fr • www.castorama.pl • www.bricodepot.ro • www.bricodepot.es • www.bricodepot.pt • www.screwfix.ie

Environmental Protection



This symbol is known as the "Crossed-out Wheelie Bin Symbol". When this symbol is marked on a product or battery, it means that it should not be disposed of with your general household waste. Some chemicals contained within electrical/electronic products or batteries can be harmful to health and the environment. Only dispose of electrical/electronic/battery items in separate collection schemes, which cater for the recovery and recycling of materials contained within. Your co-operation is vital to ensure the success of these schemes and for the protection of the environment.